# IOT BASED SPEED CONTROL OF AC INDUCTION MOTOR

Prof. V.P.Kaduskar, Avinash Jha, Nishchey Midha, Ashwini Kumar

Bharati Vidyapeeth College of Engineering

## ABSTRACT

**Availability of high speed mobile networks like 3G and Long Term Evolution(LTE) coupled with cheaper and accessible smart phones, mobile industry has seen a tremendous growth in terms of providing various services and applications at the finger tips of the citizens. Internet of Thing(loT) is one of the promising technologies which can be used for connecting, controlling and managing intelligent objects which are connected to Internet through an IP address. Applications ranging from smart governance, smart education, smart agriculture, smart health care, smart hornes etc can use loT tor effective deliveryof services with out manual intervention in a more effective manner. This paper discusses about loT and how it can be used for realizing smart horne automation using a micro-controller based Arduino board and Android mobile app or a Node MCU may be used for this purpose. In this paper, two prototypes namely horne automation using Bluetooth in an indoor environment and horne automation using Ethernet in an outdoor environment are presented.**

**An area of intensive research under the umbrella of the Internet of Things (IoT) has resulted in intensive proliferation of globally deployed sensor devices that provide a basis for the development of different use-case applications working with real-time data and demanding a rich user interface .Overcoming the lack of the standard HTML platform, HTML5 specifications Web Socket and Canvas graphics strongly supported the development of rich real-time applications. Such support has been offered by browser plug-ins such as Adobe Flash and Microsoft Silverlight for years. In order to provide a deep insight into IoT Web application performance, we implemented two test applications. In the first application, we measured latencies induced by different communication protocols and message encodings, as well as graphics rendering performance, while comparing the performance of different Web platform implementations. In the second application, we compared Web performance of IoT messaging protocols such as MQTT, AMQP, XMPP, and DDS by measuring the latency of sensor data message delivery and the message throughput rate. Our tests have shown that although Adobe Flash has the best performance at the moment, HTML5 platform is also very capable of running real-time IoT Web applications, whereas Microsoft Silverlight is noticeably behind both platforms. On the other hand, MQTT is the most appropriate messaging protocol for a wide set of IoT Web applications. However, IoT application developers should be aware of certain MQTT message brokerimplementation shortcomings that could prevent the usage of this protocol.**

## I. INTRODUCTION

A “smart home” typically is a domestic environment that has been partially automated. Home automation includes centralized control for lighting, HVAC (heating, ventilation and air conditioning), appliance management, and others. Home automation aims to enhance the comfort, energy consumption efficiency and security in domestic‟s scenarios. Generally, houses are equipped within- dependent control panels to control the entire systems and appliances present in the house. Moreover, those control panels are often not related each other. The main purpose of a smart home is to centralize the control of all the devices into a single control unit which can be programmed to do specific tasks suitable for the owner and the home in question. The goal of a smart home is not only convenience but also to reduce the consumption of resources such as power, gas, etc. Due to the current pricing on energy, resource conservation has become a part of a person‟s day-to-day life. If a person has the possibility to control his home automation remotely he can reduce the consumption of energy and thus cutting down on expenses. Furthermore, environmental sustainability has gained relevance in the latest years. If a person is away from home there is no need for the air conditioner or ventilation to operate. The same principle applies to illuminations, heating and other appliances. Some smart homes systems pause the operation of appliances until they are needed again.

Internet of Things (IoT) is extension of current internet to provide communication, connection, and internetworking between various devices or physical objects also known as "Things". IoT term represents a general concept for the ability of network devices to sense and collect data from the world around us, and then share that data across the Internet where it can be processed and utilized for various interesting purposes.[1]The Internet of things can be defined as connecting the various types of objects like smart phones, personal computer and tablets to internet, which brings in very newfangled type of communication between things and people and also between things [2]. With the introduction of IoT, the research and development of home automation are becoming popular in the recent days. Home automation system represents and reports the status of the connected devices in an intuitive, user-friendly interface allowing the user to interact and control various devices with the touch of a few buttons.

## II. LITERATURE REVIEW

- Automatic Speed Control of Single Phase Induction Motor with the Variation of Ambient Temperature

This paper is based on Automatic Speed Control of Single Phase Induction motor with variation of ambient temperature. The circuitry of the system comprises of temperature detector, control circuit and loading circuit. The control circuit is embedded with comparators, amplifiers and relays. Here algorithm, flowchart and computational approach is initiated. The detailed circuit diagram is given. This system has undergone a successful test approach and its behaviour is observed by analysing its temperature versus load curve. The equation of the curve using Newton's Interpolation method is incorporated.

Being in comfort zone is a vital nature of human being. Some thing less effort able always attracts human mind. This innovation belongs in a zone far more advanced than a fan operated by a manual regulator. This device controls the speed of the induction motor used in a fan automatically by sensing the ambient temperature [Fig 1]. Like normal household fan regulators it does not need any attention for controlling the speed of the fan and thus it reduces human effort which is very much clear to us. It uses a TRIAC (Triode for AC) based circuitry which minimizes energy consumption and thus saves power [1]. It gives a wide control of working temperature range to the user while also providing manual control in case of need. These features are as interesting as well as very useful for the mediocre class because of a low buying and maintenance cost. This whole innovation will be discussed in succeeding points

- Speed Control of Induction Motor Using Sliding Mode Controller

Induction Motors have been used as the workhorse in the industry for a long time due to its easy build, high robustness, and generally satisfactory efficiency. However, they are significantly more difficult to control than DC motors. One of the problems which might cause unsuccessful attempts for designing a proper controller would be the time varying nature of parameters and variables which might be changed while working with the motion systems. One of the best suggested solutions to solve this problem would be the use of Sliding Mode Control (SMC). This paper presents the design of a new controller for a vector control induction motor drive that employs an outer loop speed controller using SMC. Several tests were performed to evaluate the performance of the new controller method, and two other sliding mode controller techniques. From the comparative simulation results, one can conclude that the new controller law provides high performance dynamic characteristics and is robust with regard to plant parameter variations

There is a demand for high performance electric drives capable of accurately executing torque, speed or position demands. This has necessarily led to a growth in the number and sophistication of control methods applied to this problem

Particular attention has been devoted to the induction motor (IM) for reason of cost, size, weight, reliability, simplicity, efficiency and ease of manufacture.
The application of advanced control schemes for position or speed control of the IM has been made possible by thein creasing power an reducing costs of microprocessors and digital signal processors. Over the past decade, field oriented control (FOC) or vector control(VC) technique has been widely used in industry for high performance induction motor drive, where the knowledge of synchronous angular velocity is often necessary in the phase transformation for achieving the favourable decoupling control.Traditionally, two feedback loops are configured to implement a vector controlled IM drive system. The inner loop is a current regulation loop whereas the outer one is as peed or position regulation loop.

## III.SYSTEM OVERVIEW

A Node MCU ESP8266 with USB-TTL included 10 GPIO, PCB antenna is used as controller and also provides connection when connected to PC or mobile phone. It creates a local area network. This Node MCU is used to provide control signal to the 3 relays and the AC dimmer which further controls the DC motor and AC motor. The AC dimmer is based on TRIAC MOC 3021. We use access codes on the server of Node MCU. It has an inbuilt server. Using these access codes, the Node MCU and PC create a local area network. On the local server, we access the HTML webpage. This HTML webpage is created by us. HTML is a basic webpage development language. Node MCU performs two functions- it is used for WiFi, and the GPIO creates a standalone system. It uses a ESP 8266 chip which is the core of the system. This chip is responsible for WiFi. Node MCU is the development board. A power supply using IC 7805 for power supply along with a step down transformer.
Specifications of equipment used are-

- **Power Supply:**

INPUT :-

- Nominal RMS AC voltage = 230 V.
- Frequency = 50 Hz.
- Frequency variation tolerance = + 1 Hz
- Single phase ,3 Wire = Live, Neutral and ground
- Angular rate = 314.1593 Radians / sec.
- Voltage variation = + 10%
- Minimum RMS AC voltage = 207V.
- Nominal RMS AC voltage = 230V.
- Maximum RMS AC voltage = 258V.

OUTPUT:-

1) Nominal D.C Voltage =

a) +12 Volt
b) Output Current – 1 Amp (With Full Load)

2) Nominal D.C Voltage =

a) +5 Volt
b) Output Current – 1 Amp (With Full Load)

3) Nominal D.C Voltage =

a) 3.3 Volt
b) Output Current – 100 mAmp.

4) Nominal D.C Voltage =

a)-5 Volt
b) Output Current – 1 Amp (With Full Load)

5) Nominal D.C Voltage =

a)-12 Volt
b) Output Current – 1 Amp (With Full Load)

- Transformer:

a) This system requires +/- 12 V, +/- 5 V & +3.3 V D.C Output .
Input Voltage (Peak) = Dropout Voltage + D.C Output Voltage i.e 12,5,3.3 V. +
Forward Voltage Drop across Each Diode i.e. 0.7 V.
Dropout voltage across each Regulator IC,
7812/7912 = 2V.
7805/7905 = 2V
LM1117-3V3 = 1.2 V
 But Transformer Secondary output voltage is RMS value.
Vpeak(secon) = (1.414) * Vrms.
Vpeak(secon) = (1.414) * 15 Volt.
Vpeak(secon) = 21.45 Volt.

- AC INDUCTION MOTOR:

| Model | Insulation | Bearing | Fan Blade | Voltage | Frequency | Current | Power Consumption | Speed | Air Flow |
|---|---|---|---|---|---|---|---|---|---|
| REC | | | Ø | V | Hz | A | W | RPM | CFM |
| 6125 A2 - 01 | With Potting | Sleeve | 150 | 230 | 50 | 0.24 | 25 | 2500 | 170 |
| 6125 A2 - 05 | Without Potting | Sleeve | 150 | 230 | 50 | 0.24 | 25 | 2500 | 170 |

- DC MOTOR:

| INPUT DUTY CYCLE IN % | OUTPUT VOLTAGE | OUTPUT SPEED IN RPM |
|---|---|---|
| 25% | 3V | 650 |
| 50% | 6V | 1300 |
| 75% | 9V | 1950 |
| 100% | 12V | 2600 |

NODE MCU:

The Development Kit based on ESP8266, integrates GPIO, PWM, IIC, 1-Wire and ADC all in
one board.
Power your development in the fastest way combining with Node MCU Firmware!
 USB-TTL included, plug&play
 10 GPIO, every GPIO can be PWM, I2C, 1-wire
 FCC CERTIFIED WI-FI module（Coming soon）
 PCB antenna.

- DIMMER:

**Features:**
 Works on AC power supply.
 16 levels of control.
 Works from any microcontroller input.

| Parameter | Value |
|---|---|
| Operating Voltage | 3-5v dc |
| Load capacity | 12A AC |

- RELAY:

 On-board EL817 photoelectric coupler with photoelectric isolating anti interference ability strong
 On-board 5V, 10A / 250VAC, 10A / 30VDC relays
 Relay long life can absorb 100000 times in a row
 Module can be directly and MCU I/O link, with the output signal indicator
 Module with diode current protection, short response time
 PCB Size: 45.8mm x 32.4mm.

## IV. WORKING

Node MCU facilitates WiFi connection. GPIO creates a standalone system. Node MCU uses a ESP 8266 chip which is the main core of the system. The chip takes care of the entire system. This connects over WiFi. Node MCU is the development board. There are 10 GPIO pins and 1 analog pin. There is a serial communication port as well. We use access codes on the server of Node MCU which has an inbuilt server. Using these access codes, a local area network is created.
Node MCU is connected via WiFi to a PC, which has an internet connection. This Node MCU can access the PC and they create a local area network. This local area network range can be extended by using repeaters. Now we can access the HTML webpage 192.168.4.1 which is static for our local area network. We can use a bridge or an open source broker to extend the coverage to wide area network and for worldwide access respectively.

On the local server, we access the HTML webpage. This HTML webpage is created by us. HTML is a basic webpage development language.

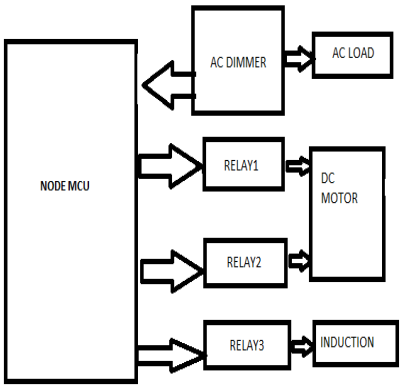


**Fig. Block Diagram**

The power supply uses IC 7805 for power supply along with a step down transformer. DC supply is provided to the DC motor, bulb, relay and the ac induction motor receives power input via the ac dimmer circuit. AC supply is provided to AC dimmer, step down transformer and the AC induction motor. Another load, a light bulb is connected via relay. 2 additional relays are used for running the DC motor for its forward, reverse and ON/OFF features. Node MCU is connected via a data cable to the PC for power supply. The software involves Arduino programming. It contains two routines, setup and loop. Setup is used for initialisation while loop is used for continuous execution.

THE webpage opens and we get the following options-

For DC motor-

- Motor forward
- Motor reverse
- Motor off

For AC induction motor-

- Motorup33
- Motorup66
- Motorup100
- MotorOff

For bulb-

- BulbON
- bulbOFF

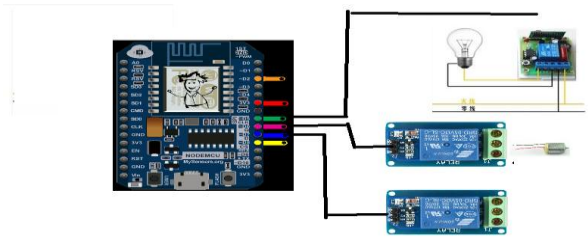

**Fig. Circuit Diagram**

The AC induction motor has speeds set at 3 levels using Arduino programming- 33%, 66% and 100%. To increase the speed of motor, we click on the motor up options, i.e motorup33, motor up66 and motorup100. We click on motoroff to turn off the ac induction motor. The REX AC induction motor is 220v, 50 hz, 28w and has a rpm of 2500.

## V. ALGORITHM

1.) Initialise Node MCU GPIO.
2.) Initialise Wifi.
3.) Setup network in client is required.
4.) If client is not required, go back to previous step.
5.) If a connection is setup, check for options.
6.) If condition A is satisfied, perform operations on DC motor.
7.) If condition B is satisfied, perform operations on light.
8.) If condition C is satisfied, perform operations on AC induction motor.
9.) If none of the conditions are satisfied, go back to step 5.

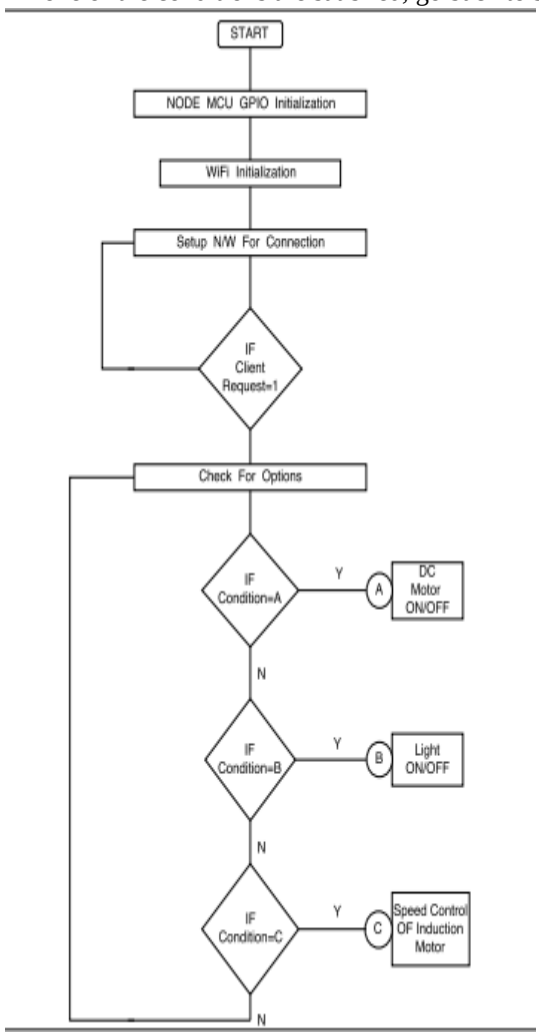


**Fig. Flow Chart**

## VI. CONCLUSION

We created a local area network with the help of Node MCU and along with PC. For this purpose a HTML webpage was developed and accessed on the local server. The HTML webpage gave us access to control the operations of our circuit.

We use access codes on the server of Node MCU. The Node MCU has an inbuilt server. Using these access codes, we create a local area network.

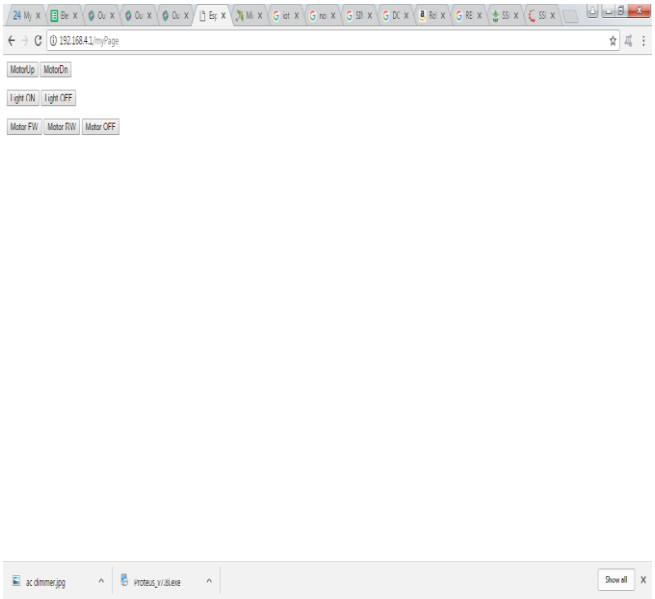


Fig. Output 1

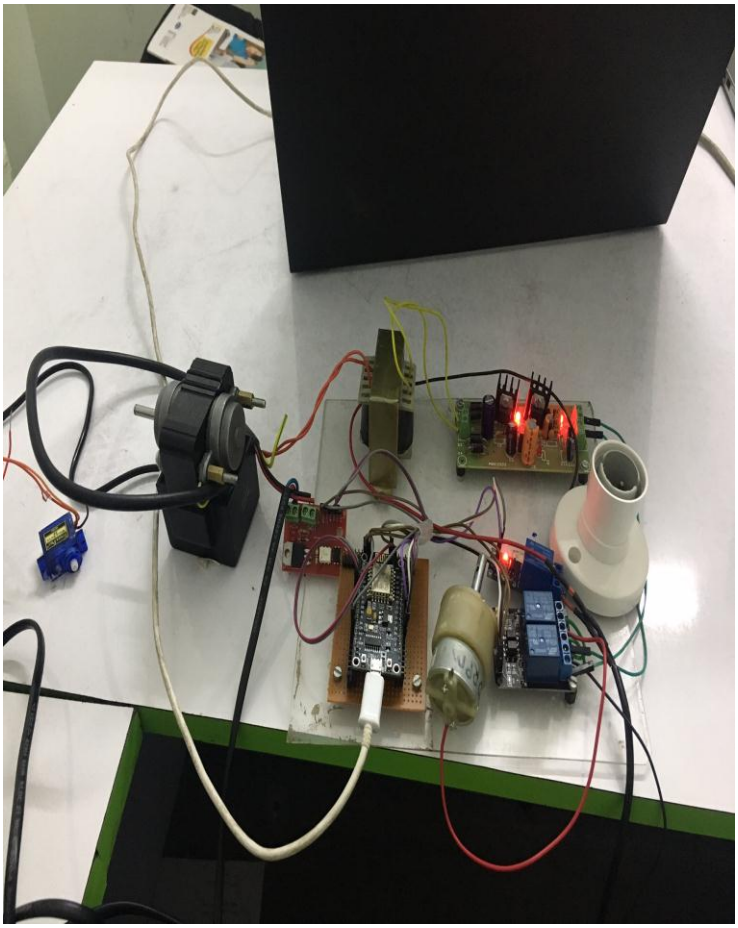

Fig. Output 2

## VII. REFERENCES

[1] AtukoralaK.,WijekoonD.,TharugasiniM.,PereraI Silva C., (2009), “Smart Eye Integrated Solution to Home Automation, Security and Monitoring Through Mobile hones”, Next Generation Mobile Applications, Services and Technologies, IEEE Third International Conference on, pp.64–69.

[2] ZhaiY., ChengX., (2011), “Design of Smart Home Remote Monitoring System Based on Embedded System”, Control and Industrial Engineering, IEEE 2nd International Conference, pp.41-44.

[3]https://www.snet.tuberlin.De/fileadmin/fg220/courses/WS 1112/snet-roject/. (Data Download Date: 20 July 2014).

[4] YAN Wenbo, Wang Quanyu, and GaoZhenwei, "Smart home implementation based on Internet and WiFi technology.", Control Conference (CCC), 2015 34th Chinese. IEEE, 2015, page no.9072-9077.